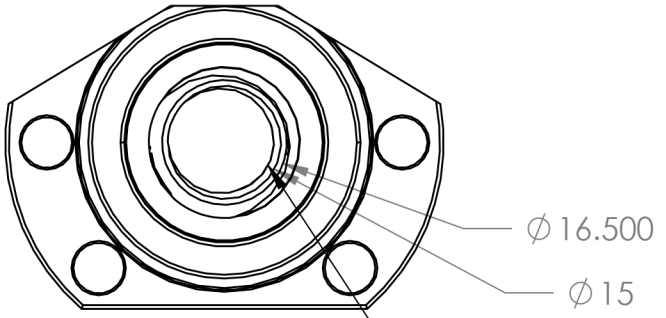
∅16.500
∅15
M12-1.75 Thred

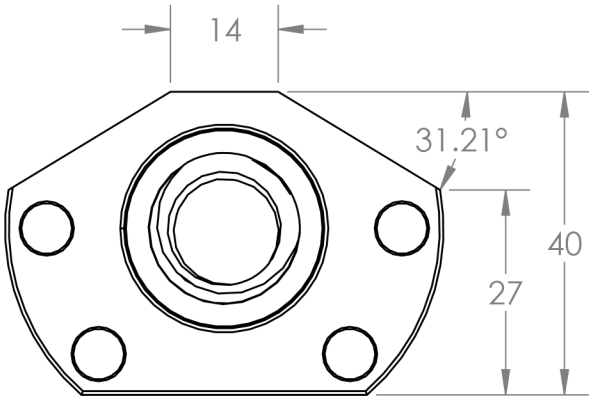
14
31.21°
40
27

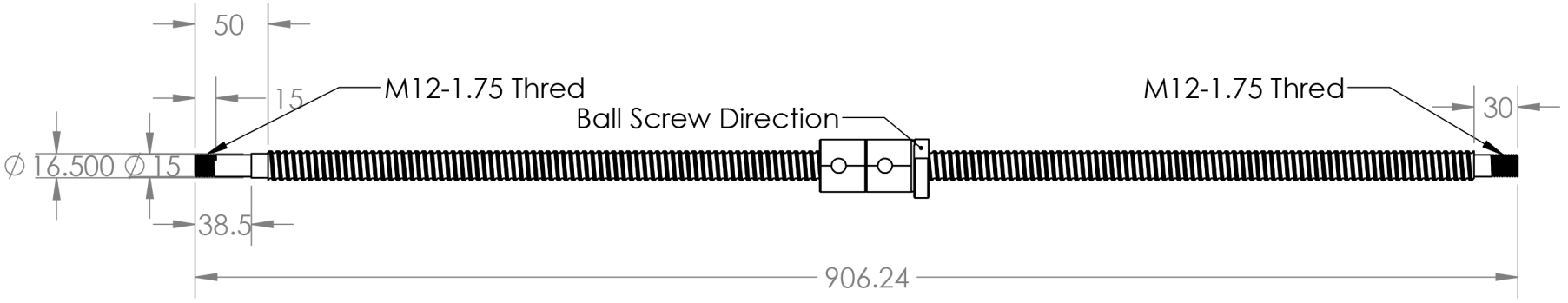
50
15
M12-1.75 Thred
Ball Screw Direction
M12-1.75 Thred
30
∅16.500 ∅15
38.5
906.24

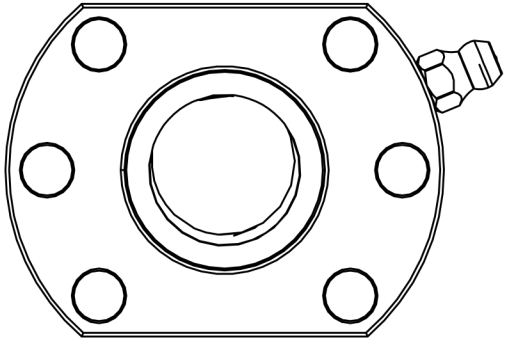

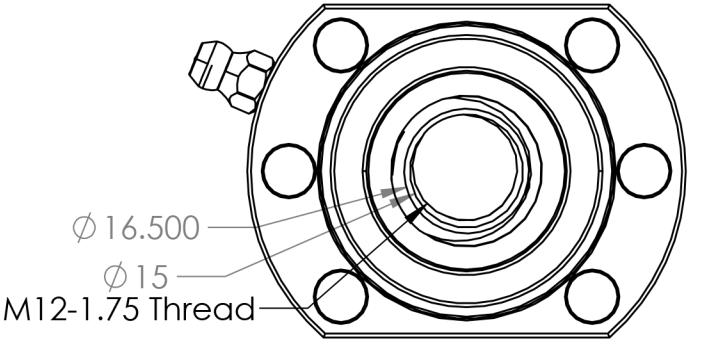
∅16.500
∅15
M12-1.75 Thread

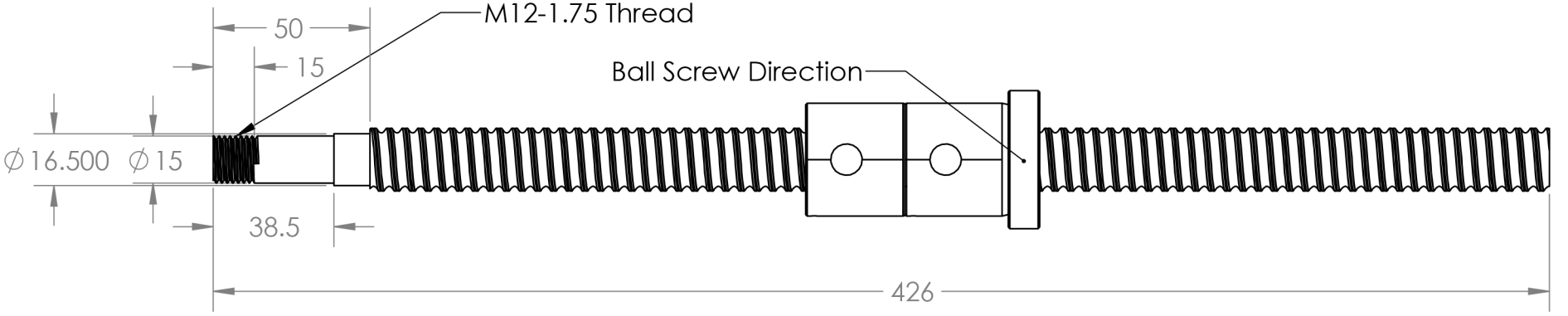
50
15
M12-1.75 Thread
Ball Screw Direction
∅16.500
∅15
38.5
426

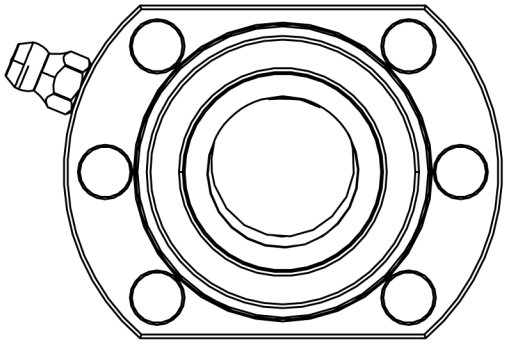

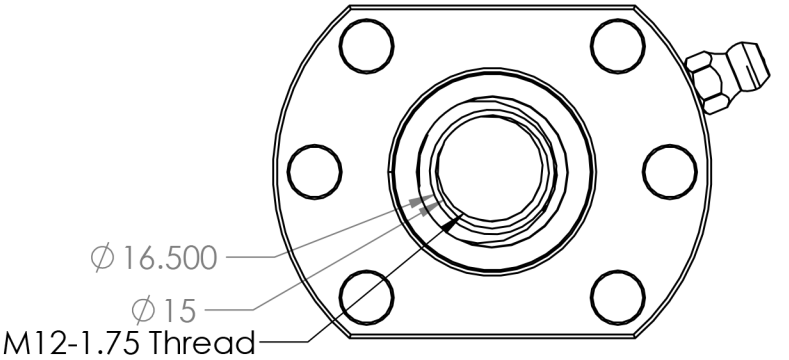
∅ 16.500
∅ 15
M12-1.75 Thread

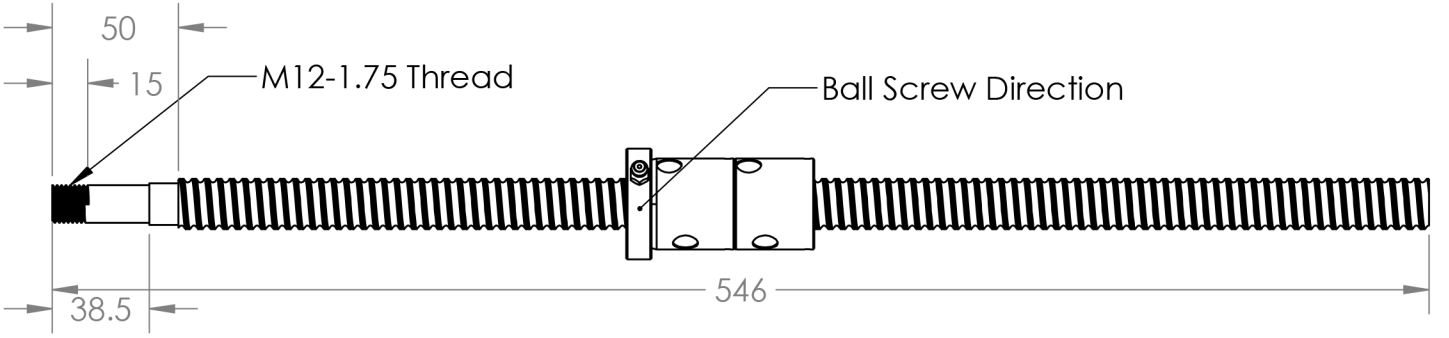
50
15
M12-1.75 Thread
Ball Screw Direction
38.5
546