16mm Ballscrew
Y-Axis Directdrive Ballscrew

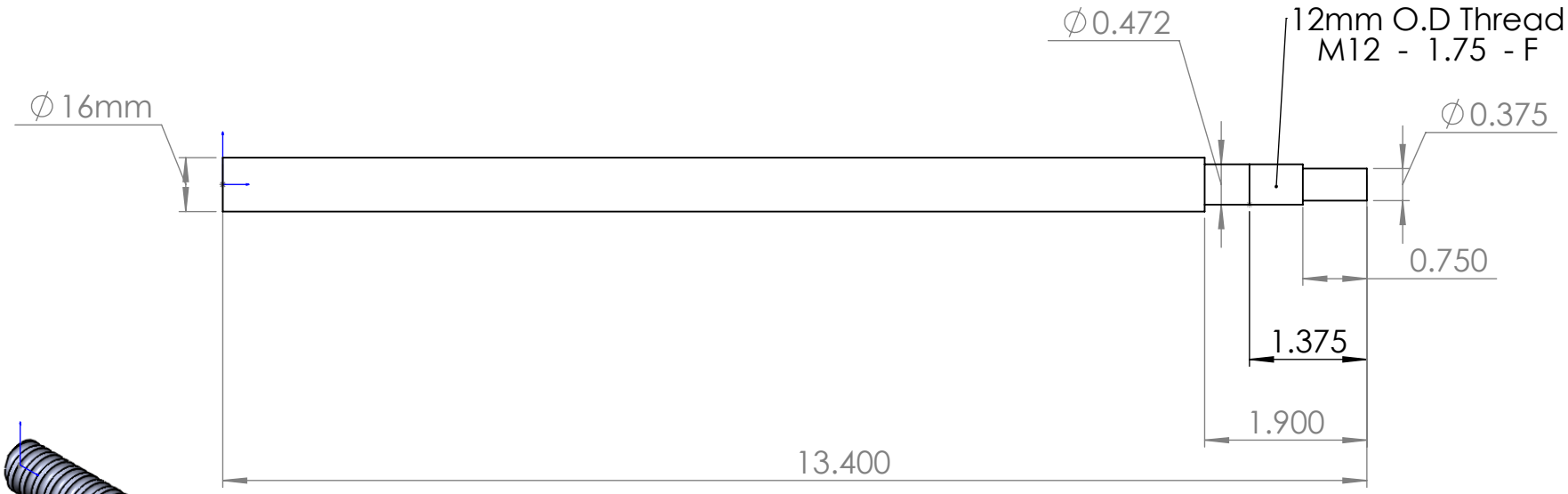

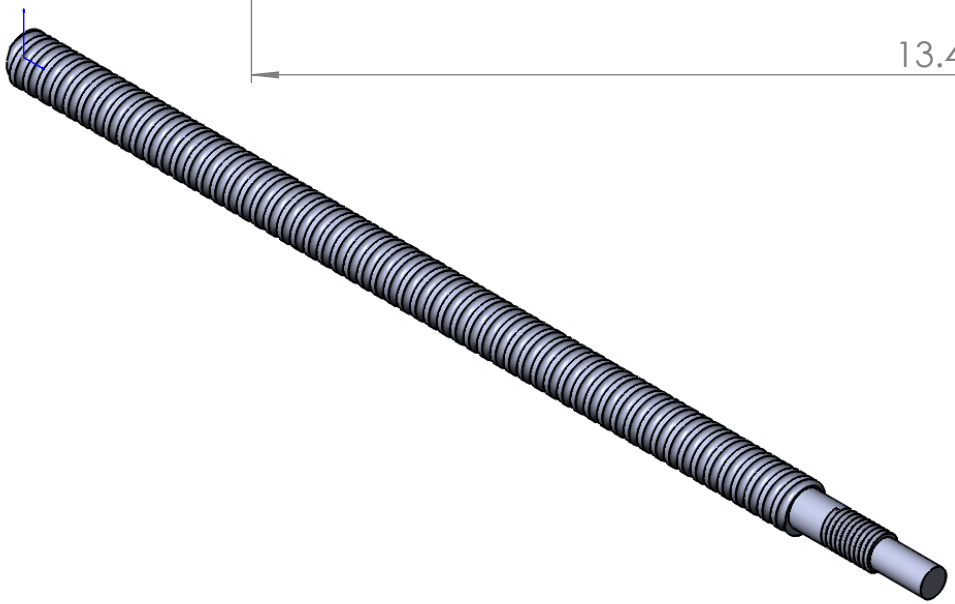

Automation Technologies Inc.	
Name:	
Y-axis Ballscrew 16MM	
Scale 1:3	

5 4 3 2 1