Dimension:

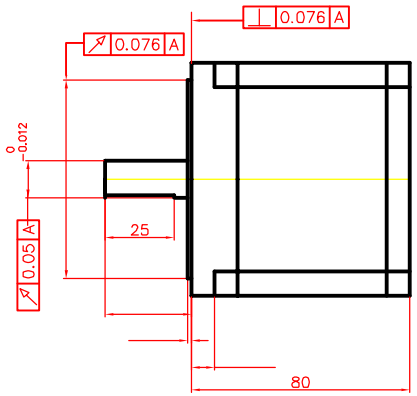

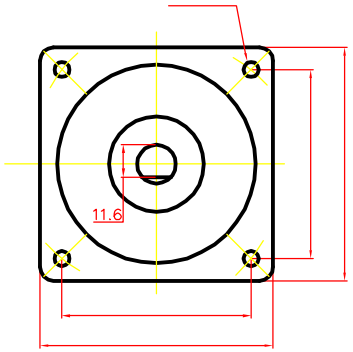

Wiring Diagram:

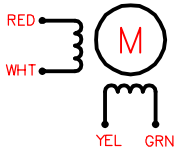

Specifications:

Phase	Step Angle	Current	Resistance	Inductance	Holding Torque	Rotor Inertia	Weight
	Deg/Step	A	ohms	mH	N.m	gcm^2	Kg
2	1.8	5.5	0.42	3.5	4.5	1400	2.3

KELING TECH