Rev:01
Date:20050728

Hybrid Stepping Motor

Type:23HM276-30-8B

COMMON RATINGS

Step angle:0.9°
Positional accuracy: +/-5%
Number of Phase: 4
Temperatuure rise: 80°C Max
Inertia: 480 gcm^2

Dielectric strength: 500VDC
Insulation resistance: 100MOhm(500VDC)
Radial play: 0.025mm max.(load 450g)
Insulating class: B
Weight: 1.0 kg

SPECIFICATIONS

	Holding Torque (2 phases on) N.m ±10%	Rated Current/Phase (Amps DC)	Phase Reslstance (ohms) ±10%	Phase Inductance (mH) ±20% Typical
Bipolar(Parallel)	2.0	4.2	0.46	2.2
Bipolar(Series)	2.0	2.1	1.84	8.8
Unipolar	1.4	3.0	0.92	2.2

DIMENSIONS unit=mm

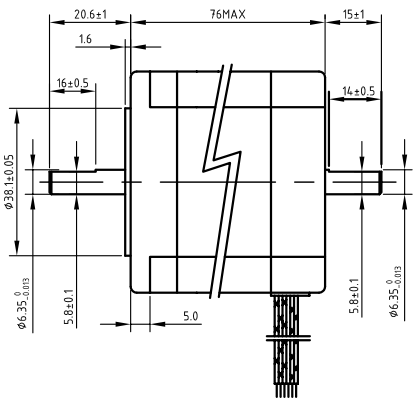

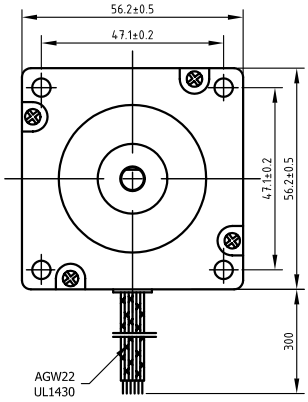

CONNECTIONS

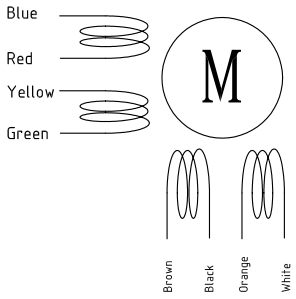

						23HM276-30-8B		技术规格书
标记	处数	分 区	更改文件号	签名	日 期			
设计			标准化			阶 段 标 记	重量 比例	
								Keling Technology,Inc
审核								
工艺			批准			共 张	第 张	