Automation Technology Inc.

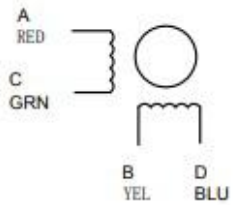

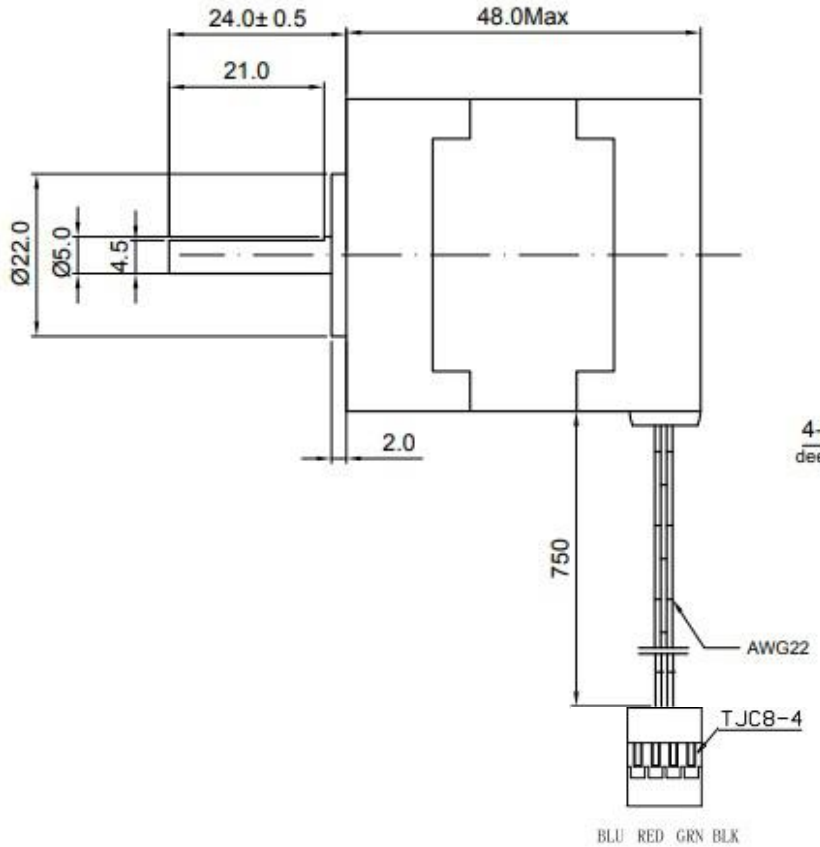

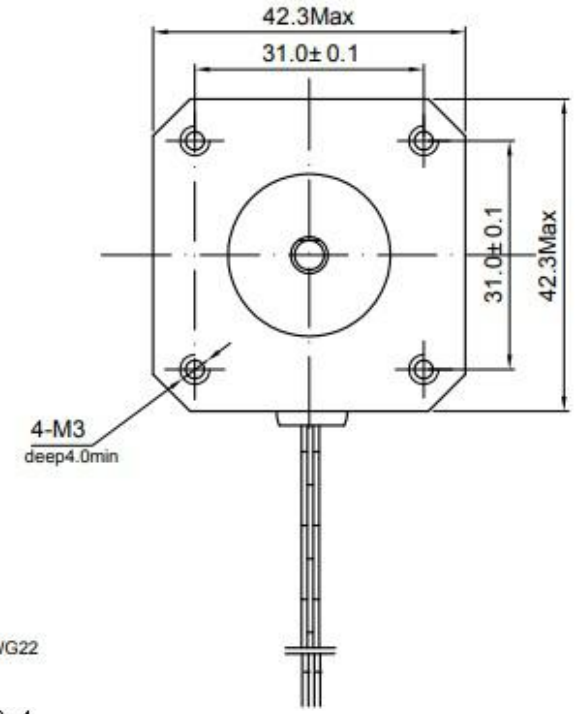

NO.	ITEM	SPECIFICATION
1	Shaft	5mm diameter with flat
2	Current Per Phase:	1.5A
3	Holding Torque:	5.5Kg.cm (76 oz-in)
4	Rated Voltage:	4.2V
5	NO. of Phase:	2
6	Step Angle:	1.8° ± 5%
7	Resistance Per Phase:	2.8Ω± 10%
8	Inductance Per Phase:	4.8mH± 20%
9	Insulation Class:	Class B
10	Dielectric Strength:	100Mohm
11	Operation Temp Range:	-20 ~ +40° C
12	Lead Wire:	22AWG / 750mm with connector to stepper motor driver